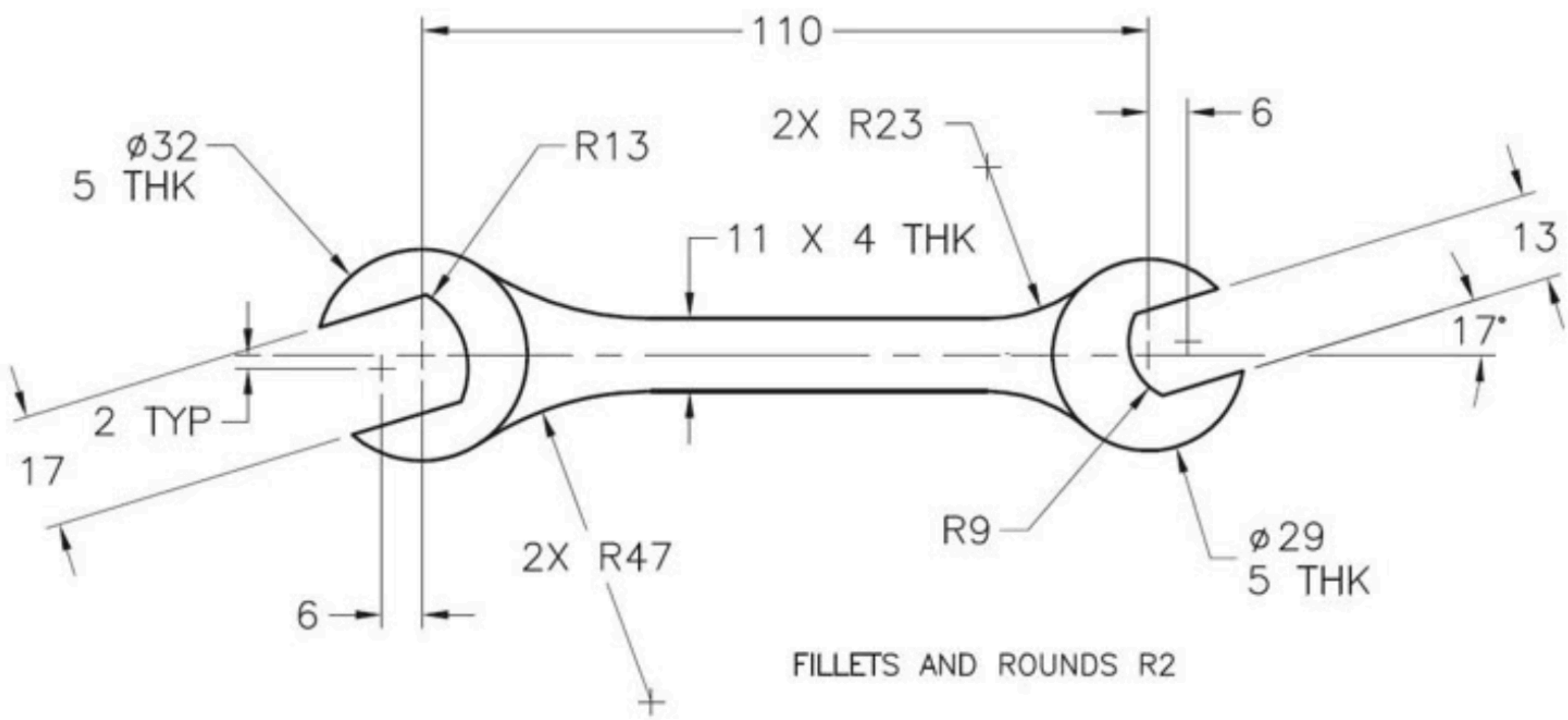
110
6
2X R23
R13
ø32
5 THK
11 X 4 THK
13
17°
2 TYP
17
2X R47
R9
ø29
5 THK
6
FILLETS AND ROUNDS R2

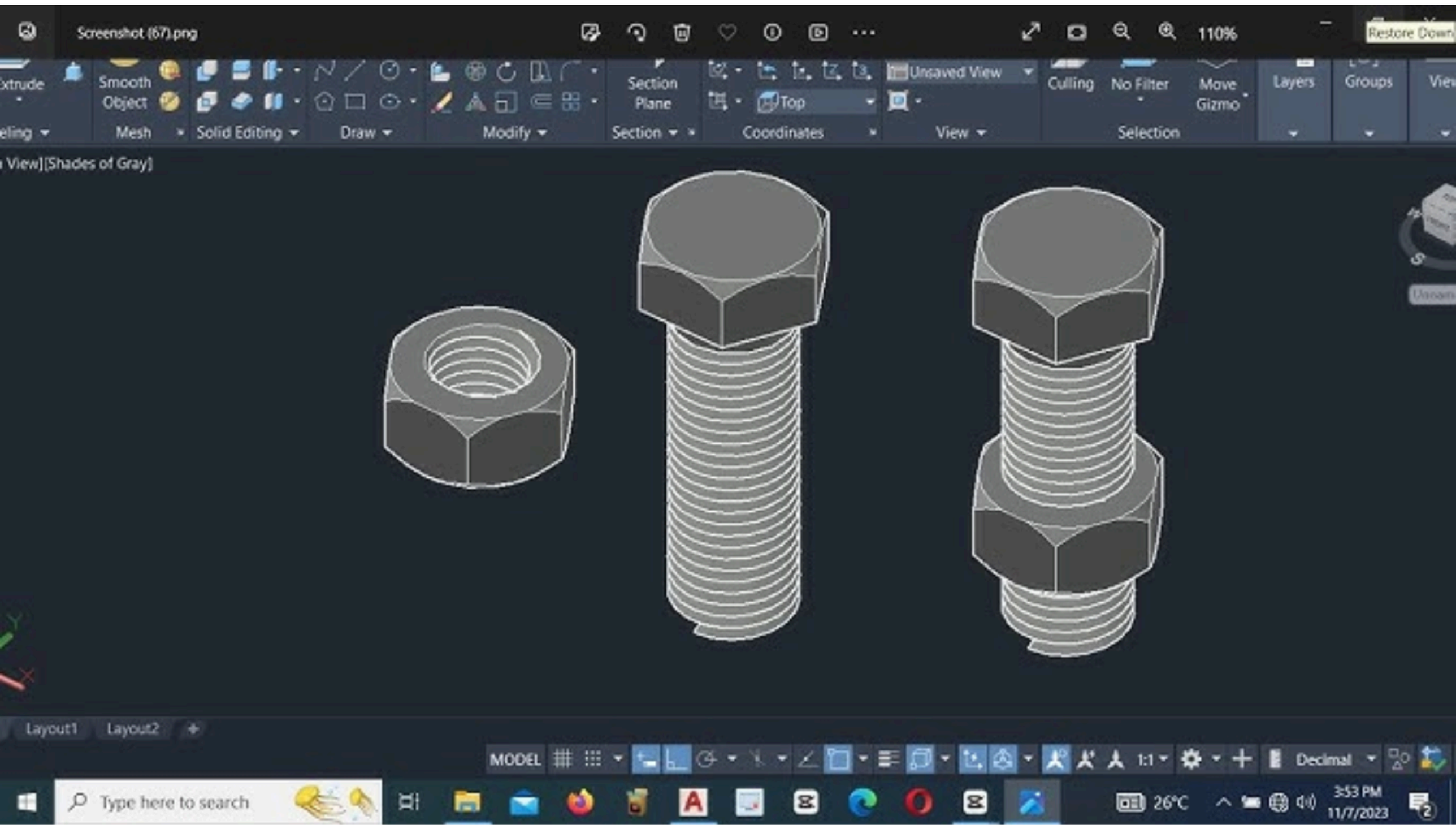
Screenshot (67).png
110%
Restore Down
Smooth Object
Mesh
Solid Editing
Draw
Modify
Section Plane
Section
Top
Coordinates
Unsaved View
View
Culling
No Filter
Move Gizmo
Selection
Layers
Groups
View][Shades of Gray]
Layout1
Layout2
MODEL
1:1
Decimal
Type here to search
26°C
3:53 PM
11/7/2023